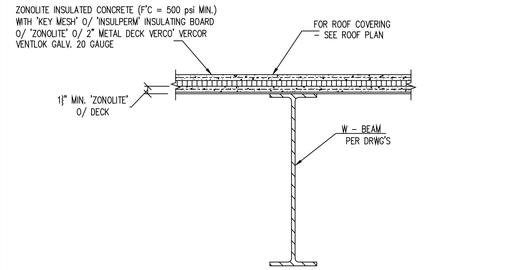

ROOF ASSEMBLES 1

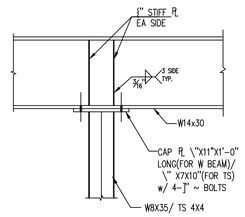

BEAM OVER COLUMN 2

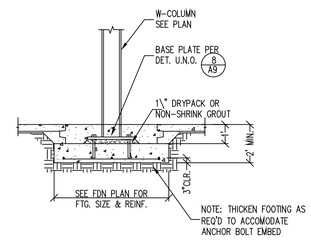

W-COLUMN FOOTING TYPICAL FOR FOOTINGS 3

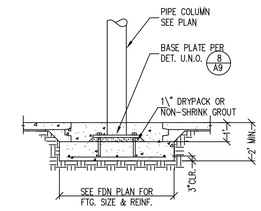

PIPE/TS COL. FOOTING 4

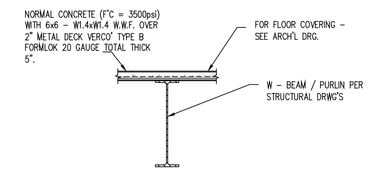

FLOOR DECK 5

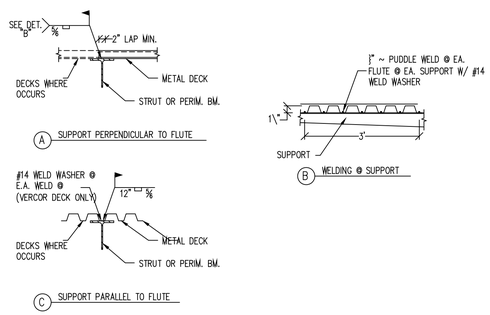

TYPICAL METAL DECK WELDING & CONNECTION – ROOF & FLOOR DECK 6

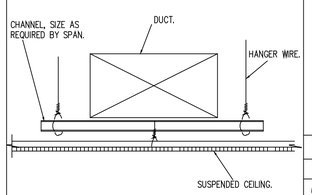

CEILING @ DUCT 7

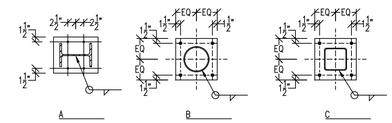

COLUMN SIZE	PLATE SIZE	DETAIL	WELD	ANCHOR BOLTS ~ x EMBED LENGTH
W8x35	\" x 10" #	A	|	4-[" ~ x 10"
6" ~ STD	[" x 12" SQ.	B	|	4-[" ~ x 10"
TS4x4x1/4	\" x 10" SQ.	C	|	4-[" ~ x 10"

TYP. COLUMN BASE PLATE SCHD 8

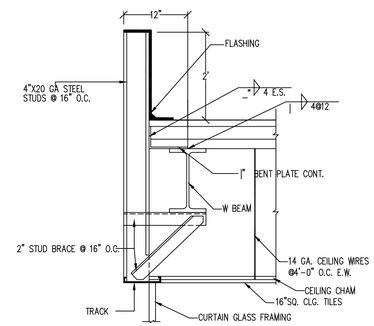

DETAIL @ OVERHANG 9

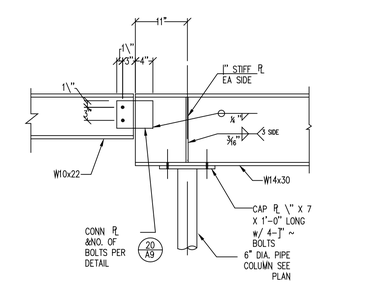

W/ BEAM TO PIPE COLUMN 10

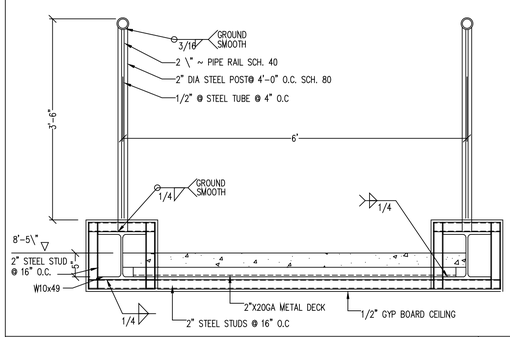

DETAIL AT BRIDGE 11

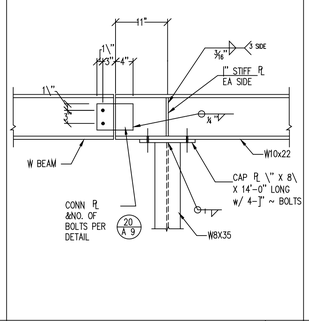

BEAM OVER COLUMN 12

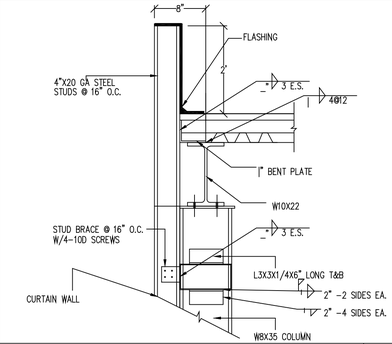

SECTION @ PARAPET 13

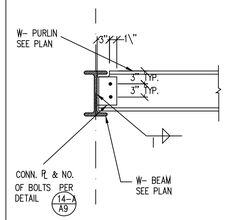

W- PURLIN TO W- BEAM 14

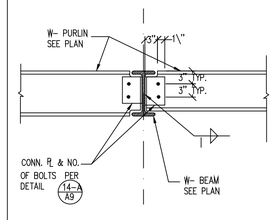

W- PURLIN TO W- BEAM 15

SHEAR PL CONNECTION

MEMBER (DEPTH)	OF BOLS]" ø A325	CONN PL 7"	WELD SIZE "A"
< 8"	2	1"	1"
8"-10"	2	1"	1"
12"-14"	3	1"	1"

NOTES

1. CONNECTED SIZE SHALL BE AS SHOWN UNLESS A GREATER SIZE IS REQUIRED BY A.I.S.C. TABLE 1.17.2A
2. ALL BOLTS ARE]" ø(UNLESS NOTED OTHERWISE) AND ARE TO BE A325 BOLTS.
2. DOUBLE ANGLES MAY BE SUBSTITUTED FOR CONNECTOR PLATES, PROVIDED THEY MEET OR EXCEED THE AQUIREMENTS OF THE AISC.

BEAM CONN. SCHEDULE 14-A

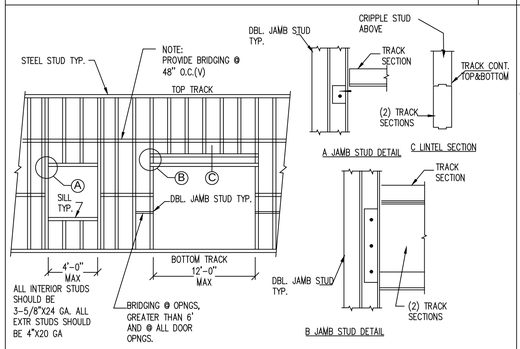

TYP. STEEL STUD WALL FRAMING DETAIL 16

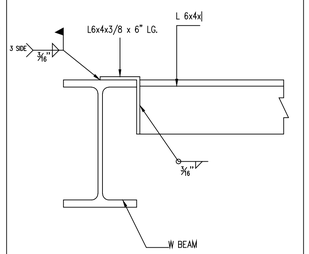

COMRESSOR SUPPORT 17

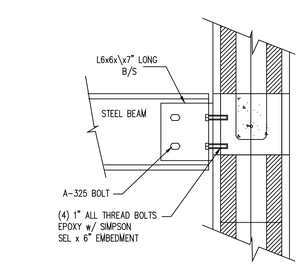

TYPICAL BOLTING TO THE WALL 18

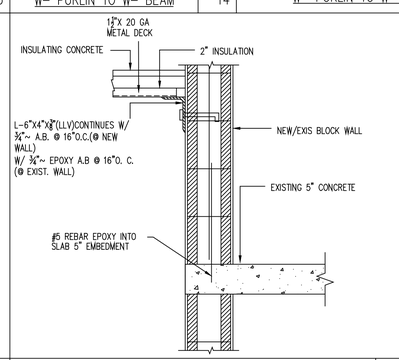

LEDGER DETAILS 19

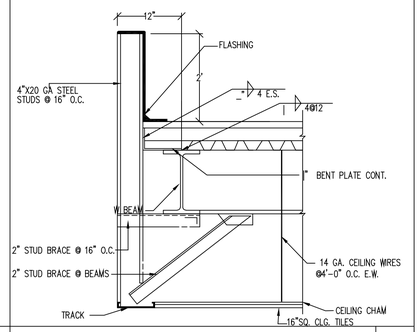

DETAIL @ OVERHANG 20

AS SHOWN

A
9